ASSEMBLY INSTRUCTIONS
FOR YOUR
ROCK A MY BABY
TABLE AND CHAIR SET

Thank you for your purchase of the Table and Chair set . We know that it will bring you and your little one years of enjoyment. **PLEASE READ ALL INSTRUCTIONS THOROUGHLY BEFORE BEGINNING ASSEMBLY.**

General Safety Instructions:

-Your table and chair set is safety tested (table for all ages, chairs for 18~96 months)
-However, it is recommended that caution be used at all times.
-Chairs are recommended for children up to 100 lbs.
-Doll chair is not intended to be used by children for seating. Only use for doll, plush animal, etc. Recommended weight limit is 20 lbs.

What tools you will need?

-Standard Philips head screwdriver. CAUTION: It is highly recommended that you not use power tools or electric screwdrivers as screws should not be over-tightened. Power/electric tools may strip either the screw or the receiving end of the screw.

Care Instructions:

-If there are fabric cushions on your chairs,we strongly recommend that these only be dry-cleaned.

LOD20017A

LOD20017B

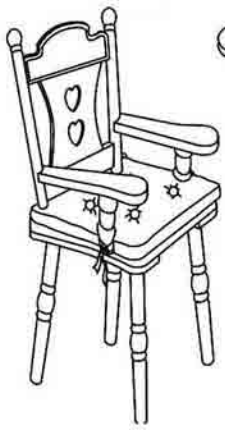

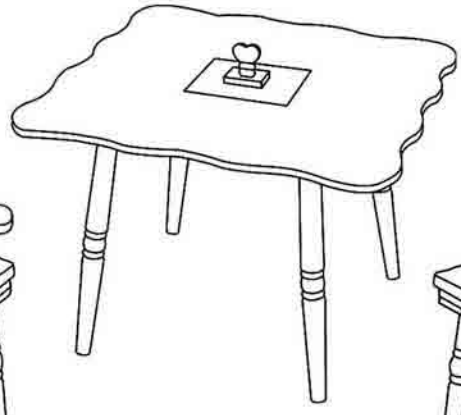

LOD20017C

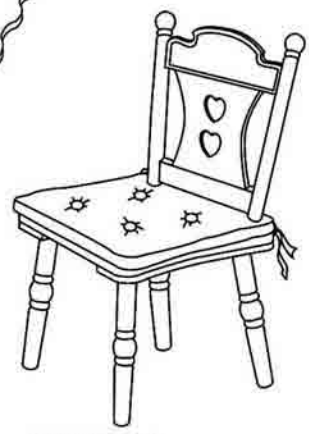

Doll Chair
(not intended for use by child for seating
-recommended weight limit – 20 lbs)

Child's chair

⚠ WARNING:

Products shall be assembled by adult. Product contains sharp point, sharp edge and small parts before assembled.
Keep out of child's reach when products unassembled.

One table, one child's chair and one doll's chair are shown. However, the set you received might be different. If you would like to order extra chairs of any style, please contact us at sales@levelsofdiscovery.com.

LOD20017A (Shown Actual Size)

A. Table Top

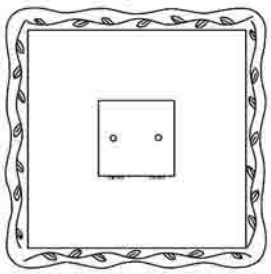

B. Table Legs(4pcs)

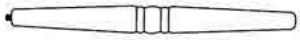

C. Heart handle

H. screw
Length 1/2" (2 pcs)

LOD20017B (Shown Actual Size)

D1. Doll's seat

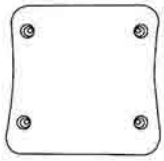

E1. Doll's chair legs (4 pcs)
Length 14-3/4"

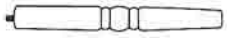

L1. Cushion (for doll's seat)

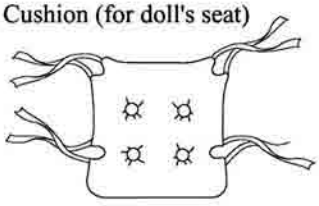

F1. Doll's chair back

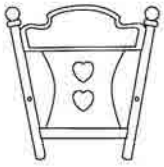

M. Left arm

N. Right arm

I. Large Washers
Outer diam.1-1/4" (2 pcs)

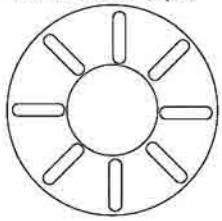

J. Med. Washer
Outer diam.3/4"(2pcs)

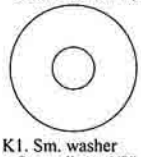

K1. Sm. washer
Outer diam. 5/8" (4 pcs)

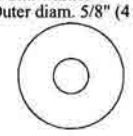

G. screw
Length 1-1/4" (2 pcs)

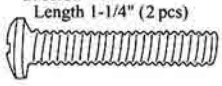

K. Spring Washers
Outer diam. 3/8" (6 pcs)

G1. screw
Length 1-7/8" (2 pcs)

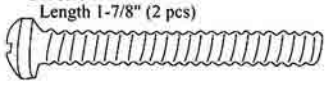

H1. screw
Length 1-1/16" (2 pcs)

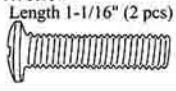

LOD20017C (Shown Actual Size)

D. Seat

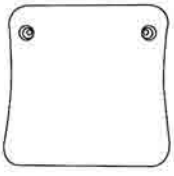

E. Chair legs (4 pcs)
Length 10-7/8"

L. Cushion

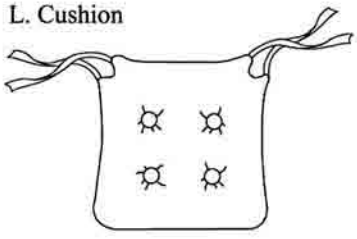

F. Chair back

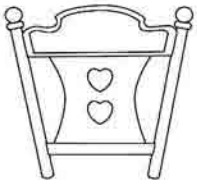

I. Large Washers
Outer diam.1-1/4" (2 pcs)

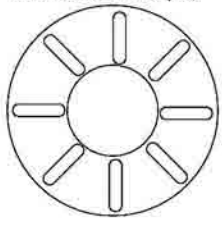

J. Med. Washer
Outer diam.3/4"(2pcs)

K. Spring Washers
Outer diamt. 3/8" (2 pcs)

G. screw
Length 1-1/4" (2 pcs)

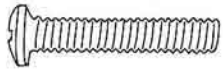

TABLE ASSEMBLY

Fig. 1 Attach table legs (B) to table top (A)

-Set the table top (A) upside down on a soft floor surface to avoid scratching.
-Insert each table leg (B) into one of the four holes on the bottom of the table and screw in until secure.
-Make sure legs are secure but not overtightened.

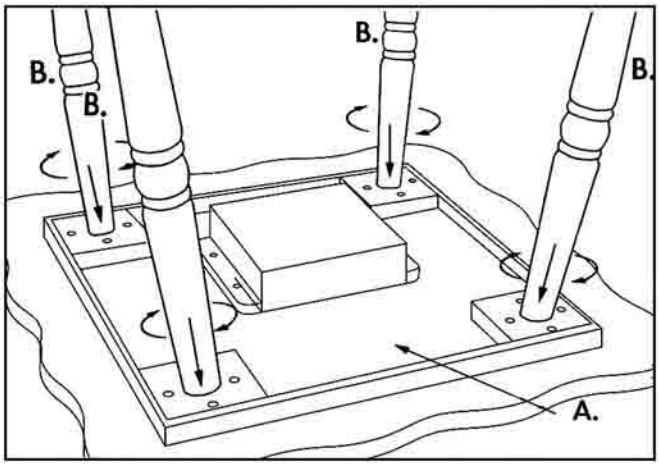

Fig. 2 Attach Heart handle (C) to music box lid

-Turn table over with legs securely on the floor.
-Pull and open the cover of the music box in the center of the table top.
-Position the Heart handle (C) over the music box lid and thread screws (H) into the holes under the lid and secure tightly.

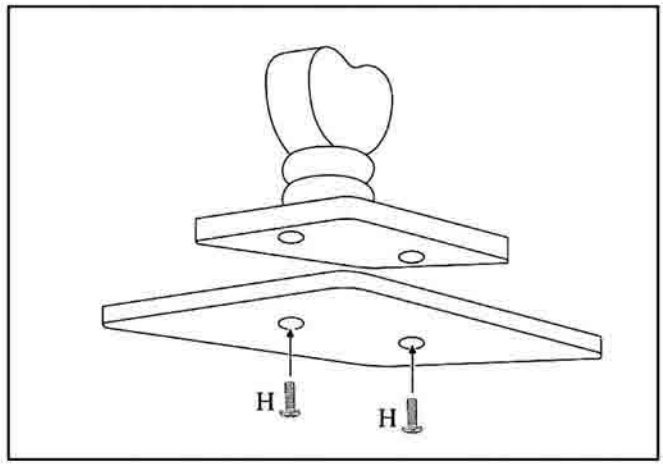

CHAIR ASSEMBLY

CHILD'S CHAIR (LOD20017C)

Fig. 3 Attach chair legs (E) to chair seat (D)

-Set the chair seat (D) upside down on a soft surface to avoid scratching.
-Thread each chair leg (E) directly into the hole on each corner of the chair seat.
-Tighten legs securely.

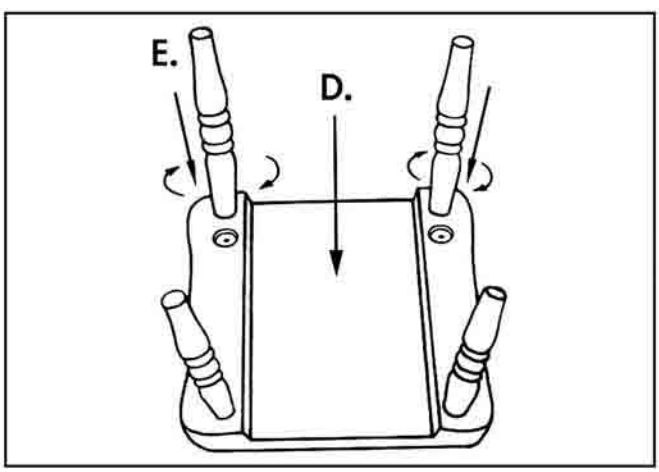

Fig. 4 Attach chair back (F)

-Turn chair seat assembly over with chair legs securely on the floor.
-Insert the chair back (F) posts into the chair seat assembly through the pre-drilled holes.
-Insert large machine screw (G) through the spring washer (K), medium washer (J) and large washer (I) as shown in fig. Then insert screw into the hole on the bottom of the chair seat.
-Secure screws with Philips head screwdriver until tight.
-Place cushion(L) on wooden seat ; then, tie the straps on both sides of cushion onto chair back.
-Repeat process for both chairs.

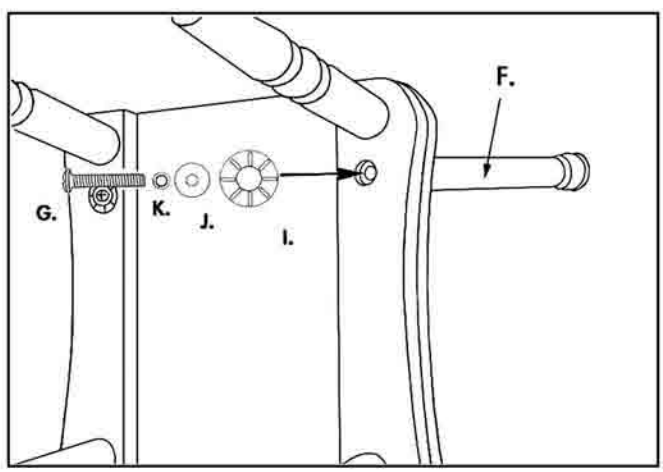

DOLL'S CHAIR (LOD20017B)

Fig. 5 Attach Doll's chair legs (E1) to Doll's Seat(D1)

-Set the Seat (D1) upside down on a soft surface to avoid scratching.
-Thread each chair legs (E1) directly into the hole on each corner of the Seat (D1) and tighten them securely.

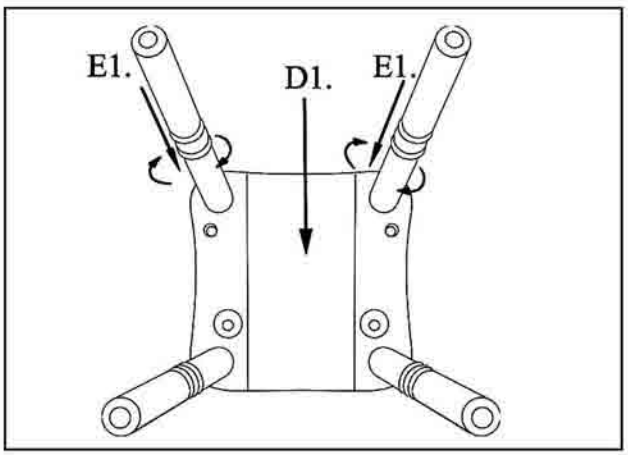

Fig. 6 Attach Doll's chair back (F1) to Doll's Seat(D1)

-Insert the chair back (F1) posts into the seat assembly through the pre-drilled holes of Doll's seat (D1)
-Insert screw (G) through Spring washer (K), Medium washer (J), and Large washer (I) as shown in fig. Then, insert screw into the hole on the bottom of the Seat (D1)
- Secure screws with Philips head screwdriver until tight.

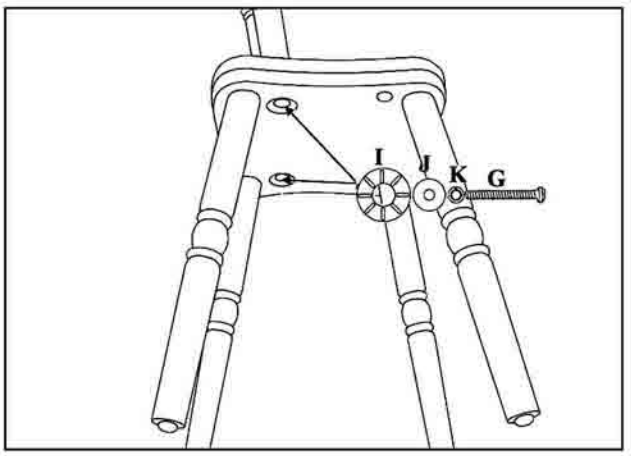

Fig. 7 Attach Arm rests (M, N) to chair back (F1) posts

-Insert screw (G1) through Spring washer (K) and Sm. washer (K1) as shown in fig. and secure them into the hole on chair back (F1) posts with Philips head screwdriver until tight.
-Repeat process for both arms

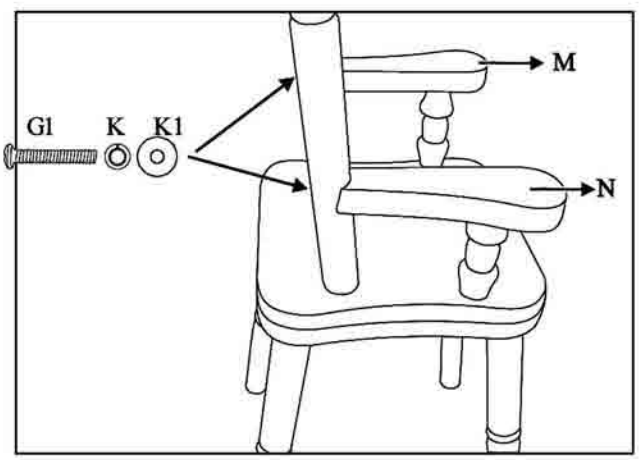

Fig. 8 Attach Arm rests (M, N) to Seat (D1)

-Insert screw (H1) through Spring washer (K) and Sm. washer (K1) as shown in fig. and secure them into the hole on the bottom of Seat (D1) with Philips head screwdriver until tight.
-Repeat process for both arm rests.
-Place Cushion (L1) on Seat (D1) and tie the straps on both sides of cushion onto Chair back (F1).

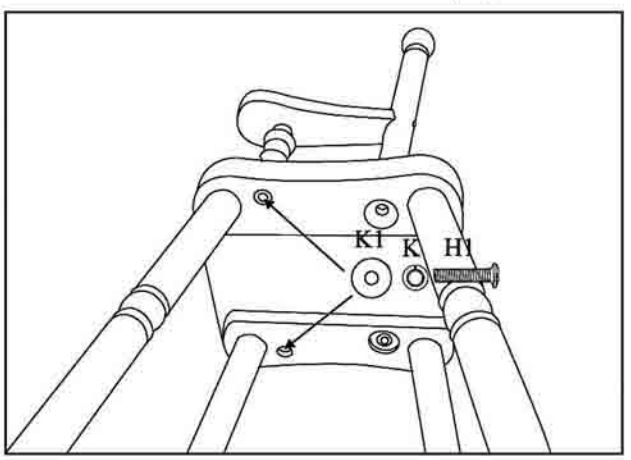

Finally, please check that all parts are tightened securely but **do not overtighten.**
Your Table and Chair Set should now be ready to use. Enjoy!

Please visit our website and discover all our other innovative and fun products for kids at:

www.levelsofdiscovery.com

Table and Chair Set
© 2004 Levels of Discovery LLC
Roselle,Illinois 60172

Made in China
Printed in China